Chapter 21

LOW-COST WATER SUPPLY TECHNOLOGIES

Technological options/Dug well/Tubewell technology/Design, construction and maintenance of tubewells/Alternative water supply technologies

21.1 TECHNOLOGICAL OPTIONS

The low-cost options available for water supply systems in rural and peri-urban areas depend on the hydrogeological conditions, availability of a water source and the quality of water in the particular area. All the options are not considered suitable or feasible in all areas. Drinking water supply is mainly based on groundwater sources in Bangladesh. Groundwater is free from pathogens and requires no treatment for domestic water supply. But groundwater is rich in dissolved salts. Dissolved iron content and hardness in groundwater in relatively shallow aquifers are quite high, restricting other domestic uses of tubewell water. Now, the presence of arsenic in groundwater has become a great concern in Bangladesh. Considering the abundance of groundwater, manually operated handpump tubewells are the most common low-cost option in rural areas. However, various alternative technologies for problem areas have been developed in Bangladesh to meet the local demand. The technological options can be grouped under three categories:

- dug wells,
- tubewells and
- alternative water supply technologies.

21.2 DUG WELL

The dug well is the oldest method of groundwater withdrawal in which a hole is dug in the ground to a depth below the groundwater table. The flow in dug wells is actuated by the lowering of the water table in the well due to withdrawal of water. It is widely used in many countries for domestic water supply.

Usually no special equipment or skill is required for the construction of dug wells. For construction by manual digging, the wells should be at least 1.2 metres in diameter. Large diameter wells may be constructed for community water supplies. The depth of the well is dependent on the depth of the water table and its seasonal fluctuations. Wells should be at least 1m deeper than the lowest water table. Community dug wells should be deeper to provide larger surface area for the entry of water to meet higher water demand. Private dug wells are less that 10m deep but dug wells for communal use are usually 20-30 metres deep.

Construction: Dug wells are lined with brick or stone masonry, cast-in-situ concrete or pre-cast concrete rings. Lining provides protection against caving in and collapse of soil during construction, and a seal against polluted water seeping from the surface into the well during operation. The most common and low-cost method of construction of dug wells is manual excavation from the inside. Removal of soil beneath the well allows the well to sink down due to its own weight. A circular wedge-shaped concrete shoe under a pre-cast concrete ring or masonry work as shown in Figure 21.1 prevents uneven settlement and a slightly larger shoe facilitates sinking without friction along the outside faces of the rings or masonry works. The sinking of the well is continued until the desired level is reached. The construction of a well under the water table requires drying of the well by pumping. The wall below the water table may have perforations for entry of water in the well. The dry season, having the lowest water table, is the ideal time for construction of a well.

In case of loose materials, the space between the outer wall of the well and the soil is filled by itself, but in cohesive soil the space is to be filled by appropriate materials. If the walls are made perforated for the entry of water, the space should be filled with coarse sand up to the height of the perforated wall. The upper part of all wells must be filled with impermeable clay to prevent entry of contaminated surface water. Placement of 100 mm of coarse sand below 100 mm of gravel at the bottom of the finished well will provide clear water even during turbulent conditions.

Sanitary protection: It is very difficult to protect the water of the dug well from bacterial contamination. Percolation of contaminated surface water is the most common route of pollution of well water. The upper part of the well lining and the space between the wall and soil should be properly sealed. The well lining should be extended at least 0.5 m above the ground to form a 'head wall' around the outer rim of the well. A concrete apron, about 2 m in width, should then be constructed on the ground surface extending all around the outer rim of the well. The apron prevents entry of contaminated used water at the well site by seepage into the well. Water in a dug well is very easily contaminated if the well is open and the water is drawn using bucket and rope. Satisfactory protection

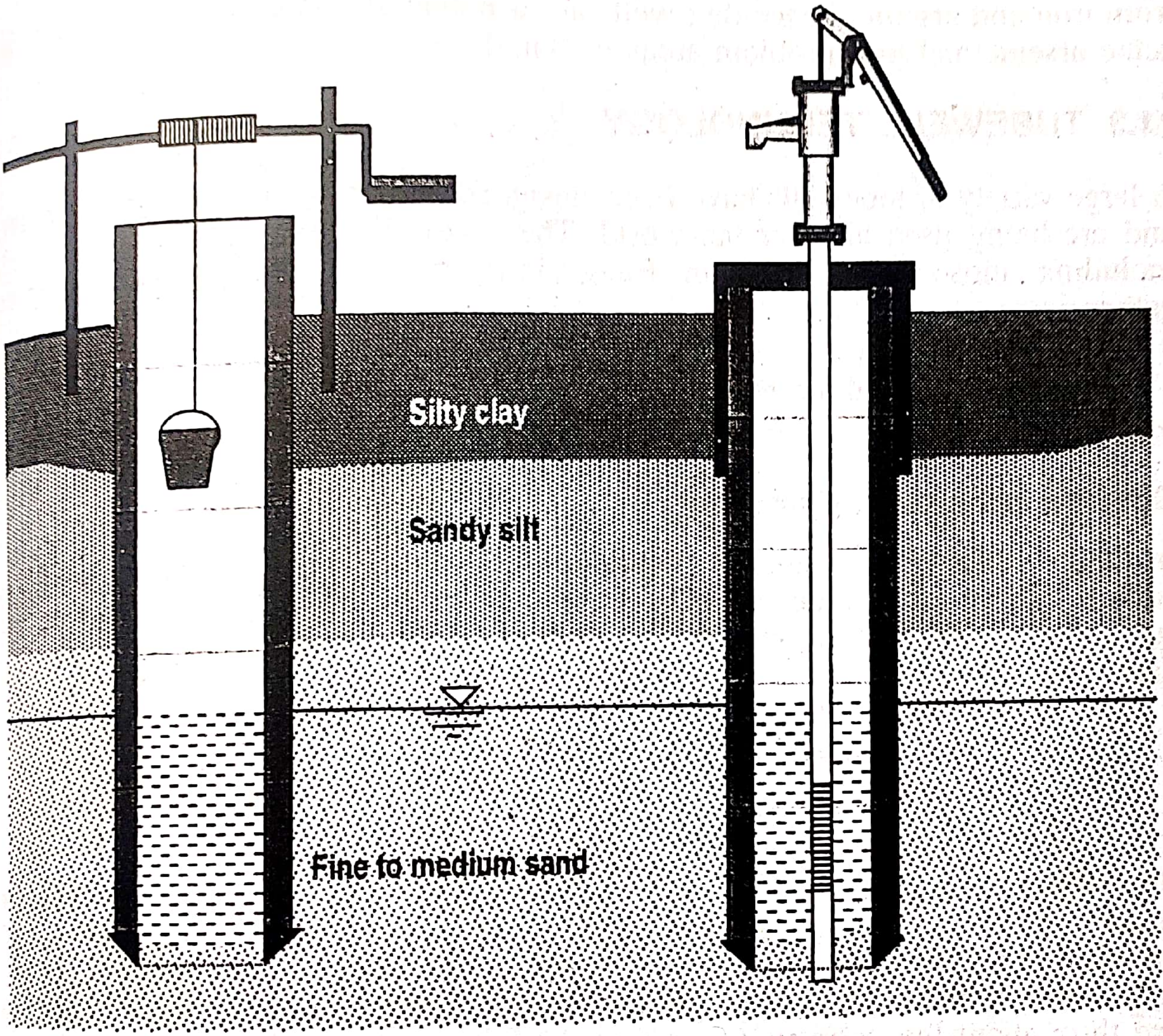

(a) Conventional Dug Well

(b) Well with Sanitary Protection

Figure 21.1 Conventional dug well and dug well with sanitary protection

against bacteriological contamination is possible by sealing the well top with a watertight concrete slab. Water may be withdrawn by installation of a manually operated handpump. Water in the well should be chlorinated for disinfection after construction. Disinfecion of well water may be continued during operation by pot chlorination as stated in section 18.5.4. A conventional dug well and a dug well with sanitary protection sunk in most common soil strata in Bangladesh are shown in Figure 21.1 (a) and 21.1(b) respectively. In a completely closed dug well, the inflow of water may be actuated by suction created due to withdrawal of water from the well.

In the Chittagong hilly areas, Sylhet and northern parts of Bangladesh, construction of handpump tubewells is not always possible due to adverse hydrogeological and stony soil conditions. Construction of protected dug wells can be a good option for water supply in these areas. Dug well water is free from iron and arsenic, hence dug wells are a potential source of groundwater in acute arsenic and iron problem areas in Bangladesh.

21.3 TUBEWELL TECHNOLOGY

A large variety of tubewells have been designed for abstraction of groundwater, and are being used all over the world. The tubewells designed and developed, including those being used in Bangladesh, may be grouped under three categories:

- Shallow tubewells,
- Deep-set intermediate technology and
- deep tube wells.

Shallow tubewell technology

In shallow tubewell technology, handpumps are operated in a suction mode. A suction pump draws water from a shallow depth by creating a vacuum in the suction pipe. The suction handpumps can practically extract water from up to a depth of 7.5 m static water level. This category of handpumps includes:

- No. 6 handpump tubewell,
- Rower pump tubewell and
- Disco pump tubewell.

No. 6 Handpump tubewell: In Bangladesh the most common and popular technology used for abstraction of groundwater is the No. 6 handpump tubewell. The name of the tubewell is based on its barrel diameter in inches. About 3-4 million public and private No.6 handpump tubewells are already in use throughout the country and a very high percentage of these tubewells is in operational condition at any time. Before the lowering of the water table was encountered, the No.6 handpump was considered to be the only low-cost option for potable drinking water supply in rural, peri-urban and urban areas where piped water supply system were not introduced. A typical No.6 handpump tubewell is shown in Figure 21.2. There are also No.4 and No.2 handpump tubewells but their use is limited to private tubewells within family premises.

Working Principle: The No.6 handpump is a suction mode handpump. A vacuum is created within the cylinder of the pump by raising the piston. In order to fill-up the vacuum, water enter in the cylinder. In the second stroke when the piston is lowered down, the water enters in the upper chamber, and comes out of the pump through the spout when the piston is raised to create vacuum again. The stroke length is 240 mm. Inertia effect exists but the mechanical advantage of pumping helps to overcome this effect. The atmospheric pressure plays a role in lifting the water. The atmospheric pressure is 14.7 psi, therefore the theoretical lifting capacity of the pump by suction is 32.8 ft. However, due to vacuum pressure and friction losses in different sections of the tubewell, the lifting capacity ranges from 22-25 ft in working condition. The discharge from a pump to a great extent depends on the aquifer condition.

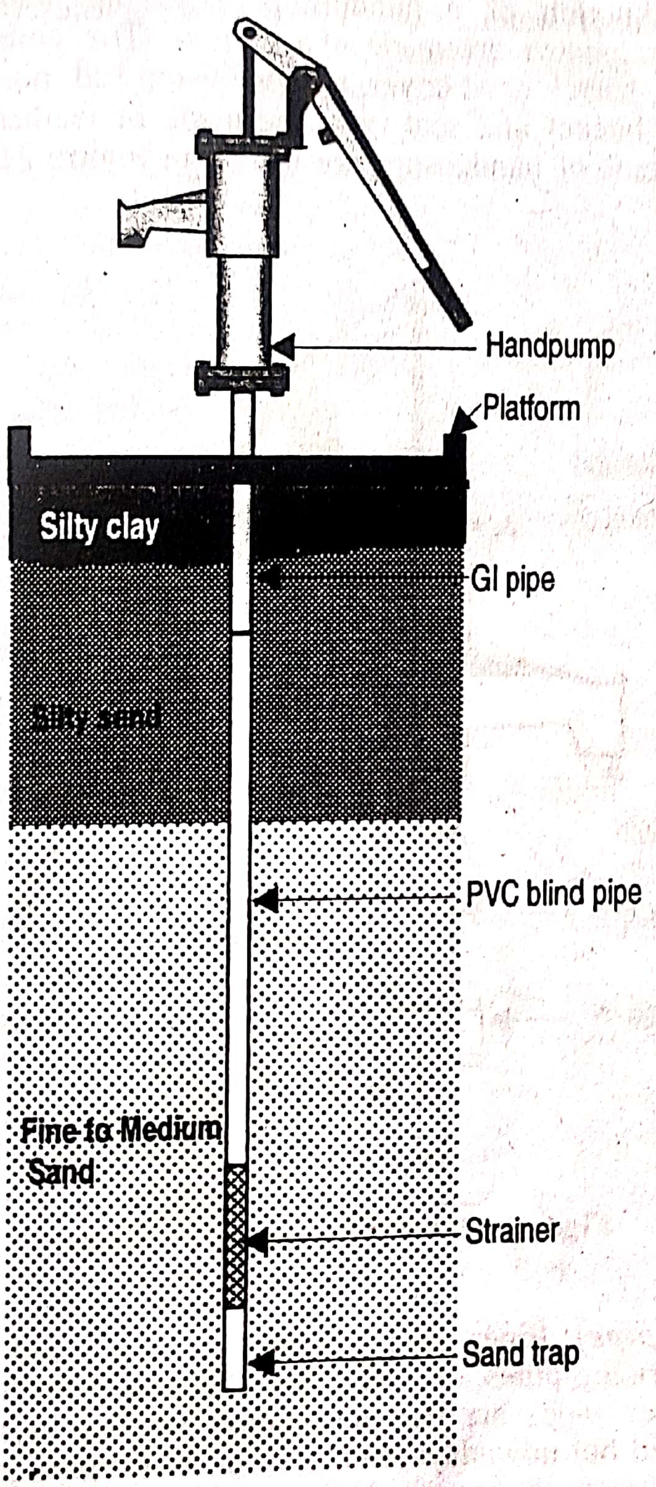

Figure 21.2 A No.6 handpump tubewell

However, the average discharge of the pump is 30-40 litres/minute. A No. 6 handpump, if installed properly, can serve for 15 to 20 years or more.

The general components of a No.6 handpump tubewell are: handpump, blind pipe (rising pipe), strainer (screen) and sand trap.

Handpump: The function of a handpump is to tap water from the well. Generally No 6 handpumps are made of cast iron. The component parts of a handpump are base, barrel, head cover, handle, piston rod, plunger, valve weight, bolts and nuts. The bucket and seat valve are made of leather or PVC (plastic). The major components of handpumps are shown in Figure 21.3.

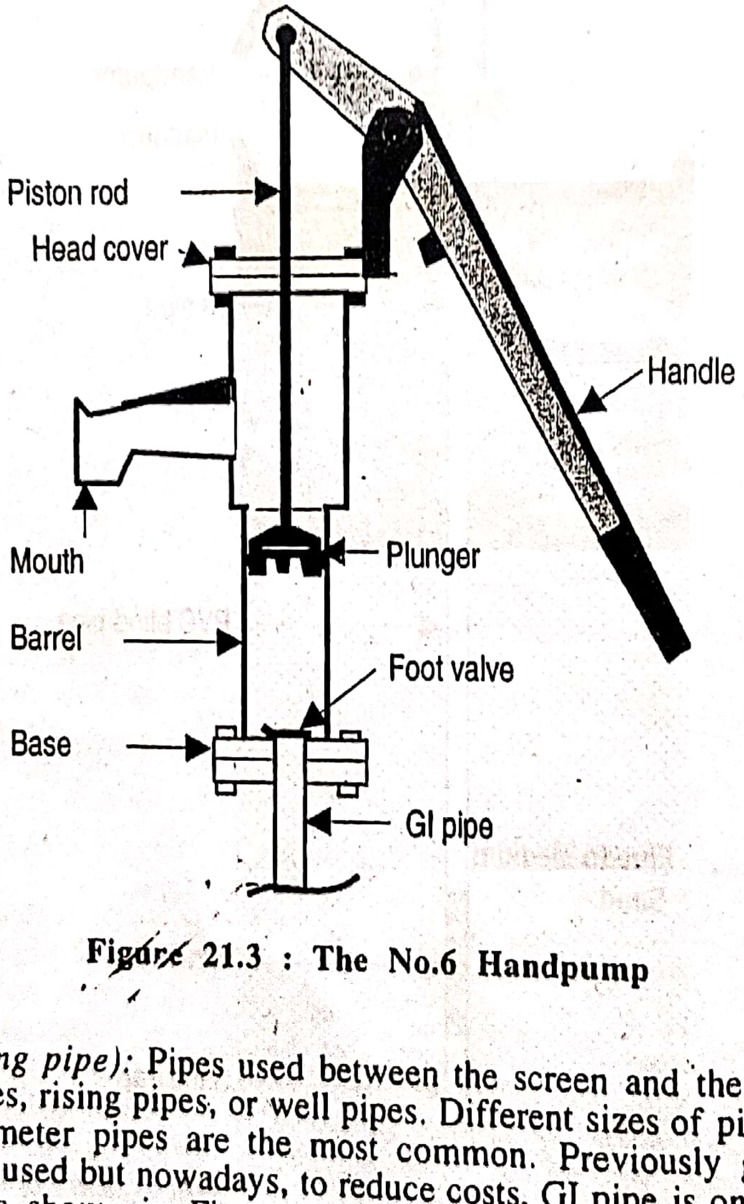

Figure 21.3 : The No.6 Handpump

Blind pipe (rising pipe): Pipes used between the screen and the handpump are called blind pipes, rising pipes, or well pipes. Different sizes of pipe can be used but 38 mm diameter pipes are the most common. Previously galvanized iron pipes (GI) were used but nowadays, to reduce costs, GI pipe is only used for the top five feet as shown in Figure 21.2 to take the external forces, and the remaining pipes are made of polyvinyl chloride (PVC). PVC pipes are corrosion resistant, easy to handle and inexpensive.

Strainer (screen): The screen is a perforated portion of a well through which groundwater enters from the aquifer. In Bangladesh 38 mm diameter strainers are used for handpumps. These strainers are usually 2 m long and are commonly made of PVC. Depending on the grain size of the aquifer, three slot sizes of strainers are used in Bangladesh. The openings are 0.008" (slot no. 8), 0.010" (slot no. 10) and 0.012" (slot no. 12). Brass strainers are also used.

These are made with perforated mild steel (MS) or GI pipes covered with 60 to 80 mesh brass/copper wire net and a brass perforated sheet (jacket). Stainless steel strainers can also be used, but these are not common in Bangladesh.

Sand trap: The sand trap is an extension of a blank pipe of about 4 to 6 ft long depending on the depth of the tubewell, fixed at the bottom of the filter. The open end of the pipe is sealed with a cap. Generally PVC sand traps are used in the tubewells. However, when the well is very deep (800'-1000') sometimes a GI sand trap is used to facilitate lowering the tubewell. The purpose of the sand trap is to accommodate the incoming fine sand, which ultimately settles at the bottom of the well. The sand trap prevents blocking of the strainer.

Rower pump tubewell: The rower pump is a manually operated reciprocating pump with a 54 mm diameter PVC pipe as the pump cylinder. The piston inside the cylinder operates by pulling and pushing a T-handle attached to the end of the piston rod. The pump is installed at a 45-60° angle with a vertical tubewell pipe through a 'Y' connector piece. The operator pulls and pushes the piston back and forth by moving the 'T'-shaped handle and withdraws groundwater by means of suction. The operation of a rower pump is like rowing a boat, hence the name 'rower pump'. The components of a rower pump are shown in Figure 21.4.

In high water table areas rower pumps are used for irrigation purposes and occasionally for domestic water supply. The operation of a rower pump is ergonomically comfortable but tiring over longer periods. Rower pumps can lift water up to a maximum suction lift of 8.5 m. The stroke length is 980 mm and maximum discharge capacity is 0.8 lps. A surge tank is fitted with the extended part of a 38 mm

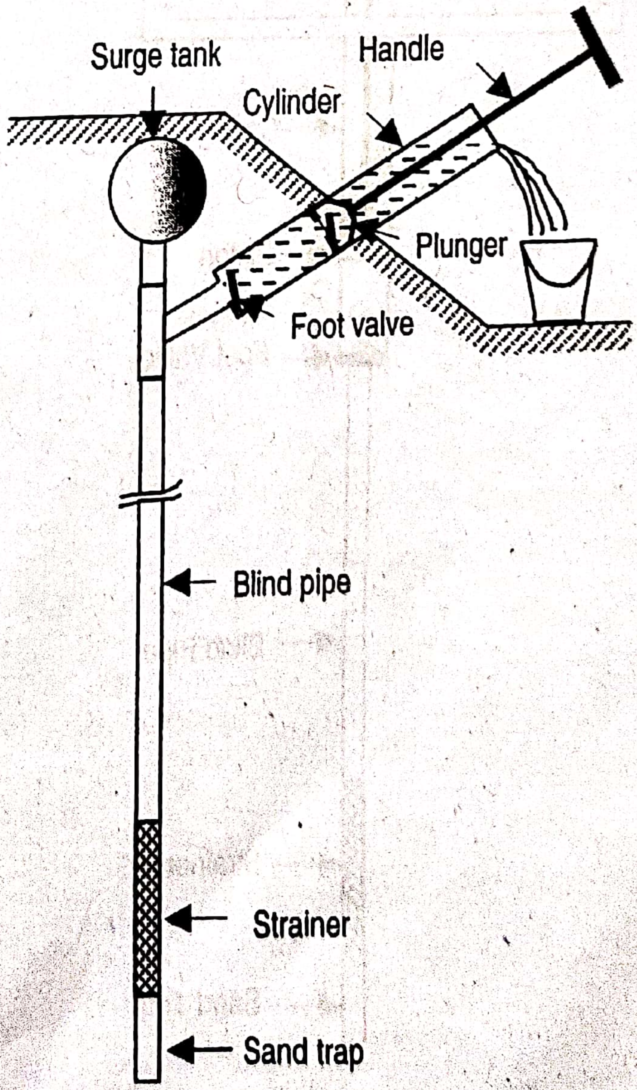

Figure 21.4 A rower pump

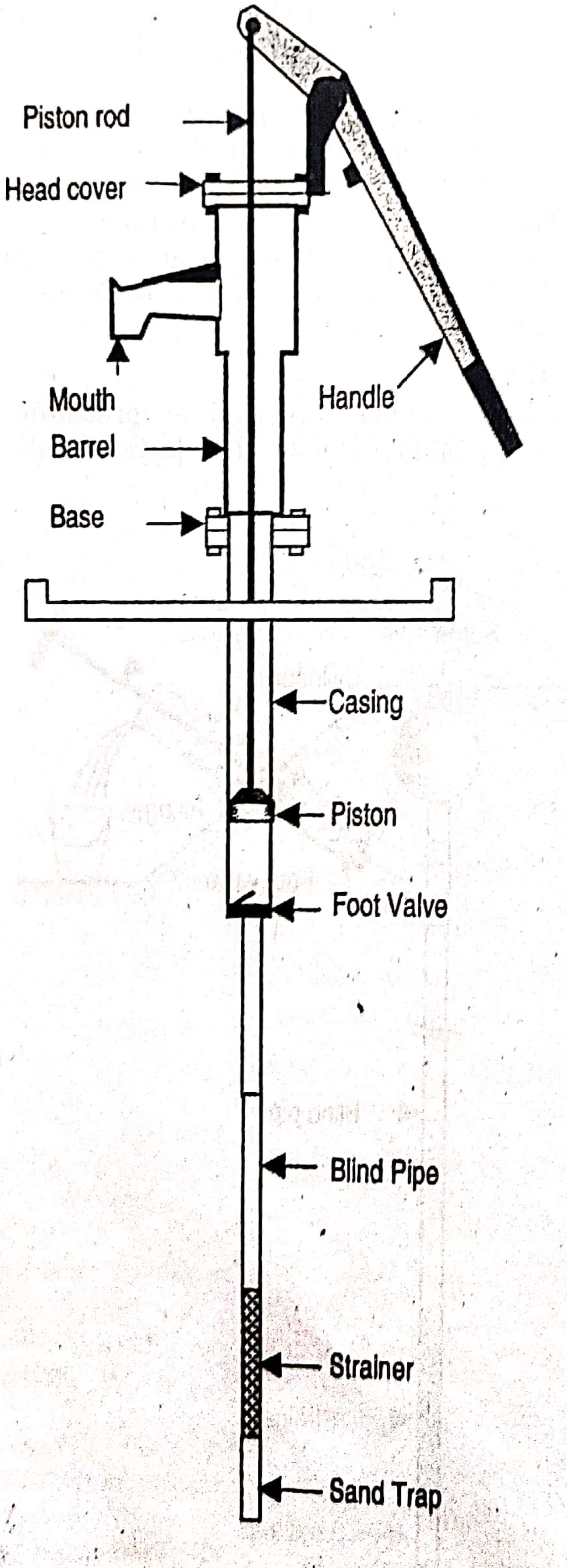

Figure 21.5 Disco handpump tubewell

tube well as shown in Figure 21.4. The inertia effect in a rower pump is partially eliminated by the surge tank. The pump is not very suitable for domestic water supply due to poor sanitary protection. The lifetime of rower pump is 3-5 years.

Disco pump tubewell : There are some areas where the water level goes beyond the suction limit for a short duration. The lowest level reached to such a depth that if the piston of a No 6 pump is extended to about 3 m; the pump could be kept operational for the whole year. To meet the water supply requirements of these areas the disco pump has been developed locally and is in use in various places. In Gazipur, it is known as 'half cylinder pump'. The 75 mm diameter GI pipe is used as the casing up to 3m below the ground surface. The suction action is extended by increasing the length of the piston rod. The discharge from the pump is equal to that of a No.6 handpump but requires comparatively more force to raise the water. The limitation of the disco pump is that it can only be used where the water level will remain within 10 m from the ground surface. A further increase in lift head will increase the cost of the pump. A diagram of a typical disco pump is shown in Figure 21.5.

Deep-set Intermediate technology

Shallow tubewells operated under the suction mode are not able to withdraw water in low water table areas. The low water table area is increasing with the increase in the use of groundwater.

Water can be abstracted from a depth beyond the suction limit using intermediate technology. Deep-set handpumps can abstract water from as high as 30 m from the static water level, depending on the technological advancement of the handpump. Handpumps in this category include:

- Tara handpump tubewell,
- Moon handpump tubewell,
- Bangla handpump tubewell,
- Mark-II handpump tubewell and
- other locally produced, improvised deep-set pumps.

Tarahandpump tubewell: In Bangladesh, the groundwater table during monsoon in most places remains within the suction limit. But due to extensive use of groundwater for irrigation, the groundwater table is falling and in the dry season it goes beyond the suction limit in many parts of the country, as shown in figure 16.10. As a result the No. 6 suction mode handpump is inoperable in dry season. To overcome this problem, the Tara handpump has been developed in Bangladesh by UNICEF and the UNDP-World Bank Program, to tap water from up to 15 m below the ground surface. A standard direct action Tara handpump designed in 1984 is shown in Figure 21.6, indicating the main parts of the pump.

Working principle: The Tara handpump is a force mode pump in which the piston of the pump operates below the static water level to eliminate the limitations of suction mode handpumps to operate in low water table areas. The cylinder of the pump is set at 18 m below the ground surface and a PVC hollow pump rod set vertically operates the piston. The pump is operated by a person holding the handle fitted at the top end of the pump rod and pulling and pushing the pump rod vertically. Hence the pump is also called a direct action handpump. The attractive feature of the pump is that the buoyancy of the pump rod reduces the manual force required to operate the pump. A Tara pump can draw water from the well in both up and down strokes. The lifting capacity of a standard Tara pump is limited to 15 m. The average discharge of the pump is 24 litres/min. An advantage of the Tara pump is that it is extractable. This means the pump assembly can be replaced when the tubewell shows defects within the cylinder.

Components: The main components of the Tara handpump as shown in Figure 21.6 are pump head, handle, top connector, pump rod, bottom convector, piston assembly, foot valve assembly and cylinder. The lower well casing, strainer and sand trap are the same as in the No.6 handpump.

A Tara tubewell is installed within 75 mm diameter casing in which a 50 mm diameter cylinder and rising main are set. The lower well casing is made of 38 mm diameter PVC pipe and is attached with the filter or well screen. The filter or well screen is a 38 mm diameter. slotted and internally ribbed PVC pipe. A 32 mm diameter PVC pipe is used as pump rod to operate the piston. A sand trap closed with an end cap is attached at the end of the well and allows the sand coming with the water to accumulate without clogging the screen. All components of the Tara pump except the pump head and handle are made of PVC. A properly installed and maintained Tara handpump should work about 10 years without major problems. Maintenance of Tara hanpump does not require additional tools. The long flexible pump rod, when withdrawn for maintenance and repair, needs support to prevent damage. The pump is yet to be proved user friendly.

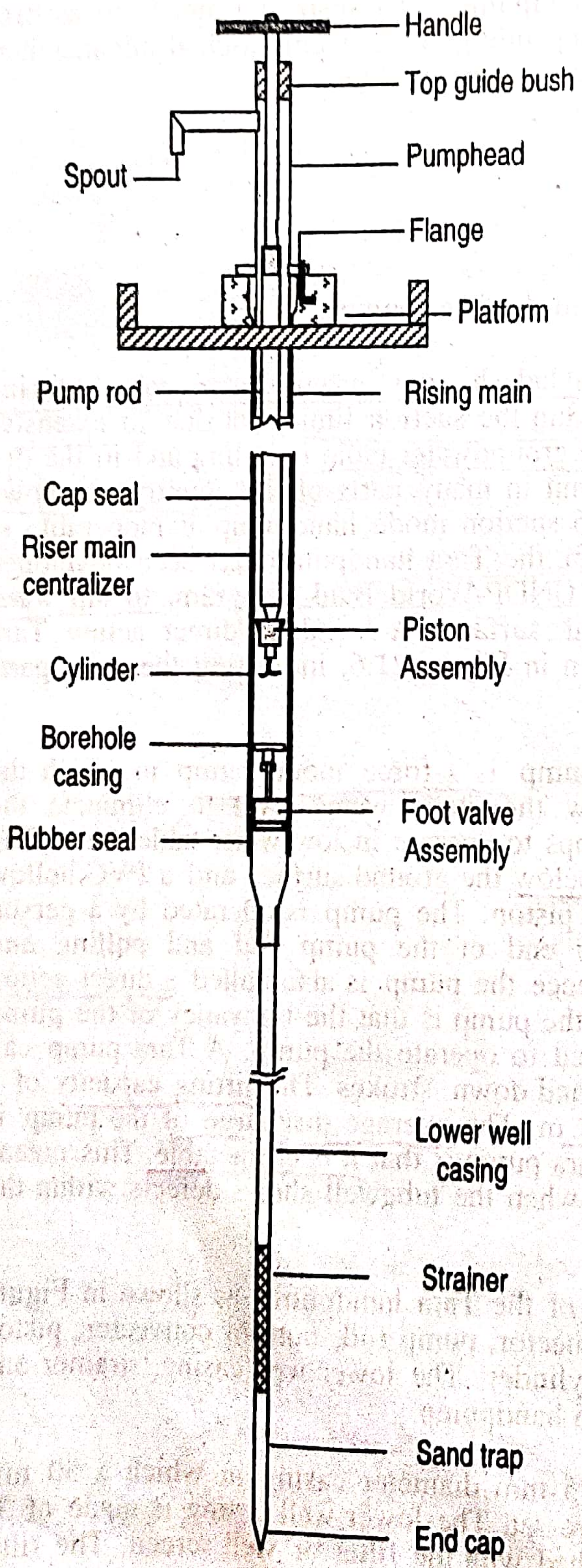

Figure 21.6 Tara handpump tubewell

The problems of Tara pump are given below.

- Because of the direct action, the force is to be applied directly by the operator without having any mechanical advantage.
- Buoyancy force is not always available for the operator due to leakage in the pump rod.
- Tara hand pump provides moderate output (max. 4 m^3/day) for 7 metre lift and very low output (max. 1.5m^3/d) for 12 metre lift.
- Failure of key components is likely at moderately high daily output.
- Repair or replacement of any parts below ground level needs to open a major portion of the assembled pump, which is often inconvenient.

Tara-II handpump tubewell: In some areas of the country, the water level in dry season goes down below 15 m, which is the lowest normal functioning range of a Tara handpump. In order to withdraw water from a deeper aquifer, the standard Tara pump is modified. The piston assembly is set at 30 m, and all other aspects of the Tara handpump, remain the same. However due to the long length of the pump rod, the pump requires a lot of force to operate far beyond the capacity of direct pull and push. This problem is resolved by installing the head of a No.6 pump through modification of the bottom flange. This modified Tara handpump, with a lower pumping mechanism and a No.6 pump head with lever action handle, is called the Tara-II handpump. It is suitable for lifting water from a depth of 30 m below ground level and able to produce about 0.5 lps.

Moon handpump tubewell: The moon handpump tubewell is a modified version of tara handpump tubewell. The direct action tara handpump tubewell is found to be uncomfortable to the users particularly to women. Considering this difficulties, the head of the tara handpump tubewell has been replaced by that of a No.6 handpump to get the advantage of the lever action and PVC pump rod has been replaced by steel rod in the moon pump. A good number of moon handpumps has been installed in Noagaon, Chapai Nawabganj and Manikganj under the Dutch assisted 18 District Town Project.

The main components of the moon handpump tubewell are shown in Figure 21.7. No. 6 pump has been as head assembly. The upper well casing is made of 75 mm diameter PVC pipe. The pump rod is made of steel, the piston assembly and foot valve assembly are made according to the inner diameter of 75 mm

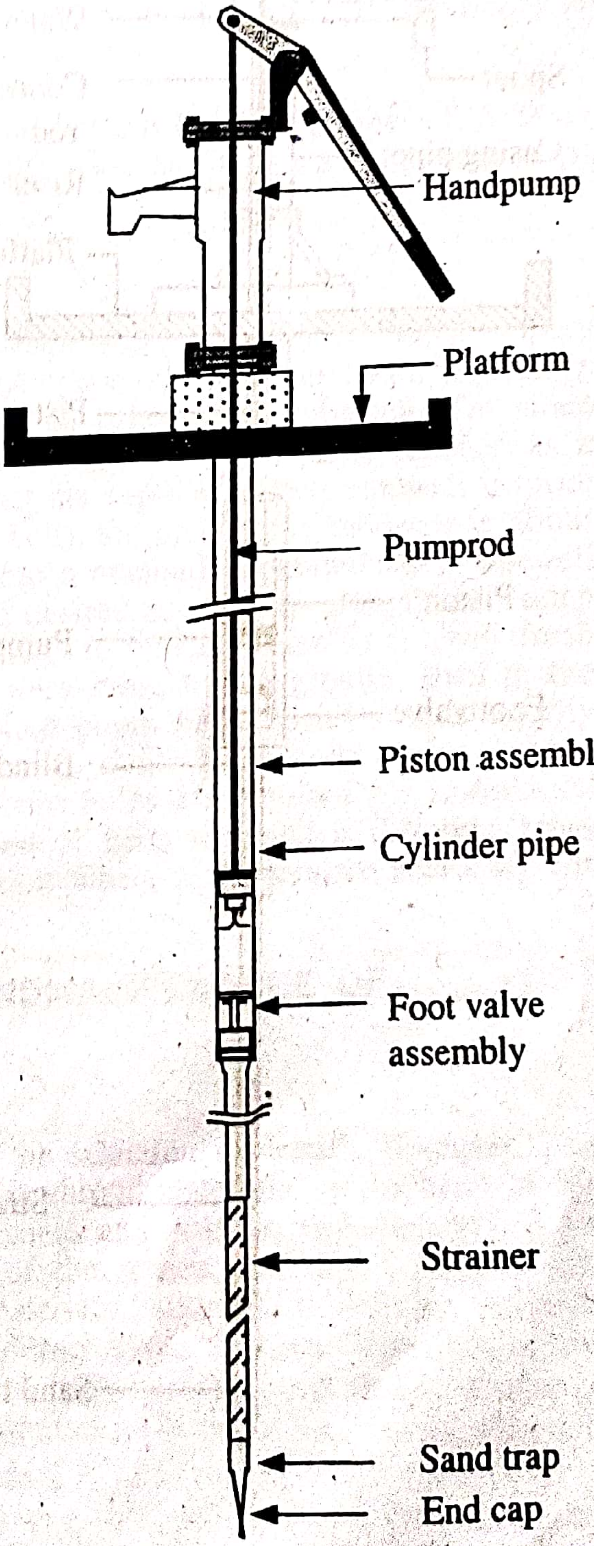

Figure 21.7 Moon handpump tubewell

diameter PVC pipe working as cylinder. The lower well casing is made of 38 mm diameter PVC pipe, PVC well screen and sand trap similar to tara handpump tubewell. The maximum discharge of a moon handpump is 0.6 lps. It is suitable for lifting water upto 25 metre.

Bangla handpump tubewell: This is a modified version of the moon pump. The difference with the moon pump is that the upper well casing is of smaller diameter PVC pipe. The lifting capacity of the pump is limited to 15 m. The pump is not widely used as it is being tested and not commercially manufactured. A performance evaluation of the Bangla pump was conducted for a short duration of two years and it was found to be functioning satisfactorily.

Mark II handpump Tubewell: The Mark II handpump tubewell, widely known as the Indian Mark II is the most popular tubewell in India and widely used in many other countries of the world. It has a deep-set pump capable of lifting water from a depth of over 30 m. Although the Mark II handpump tubewell has not yet been installed and familiarized in Bangladesh, it may serve the demand of a robust hand tubewell in low water table areas. A Mark II handpump tubewell has many similarities with a Tara II pump. However, the piston in

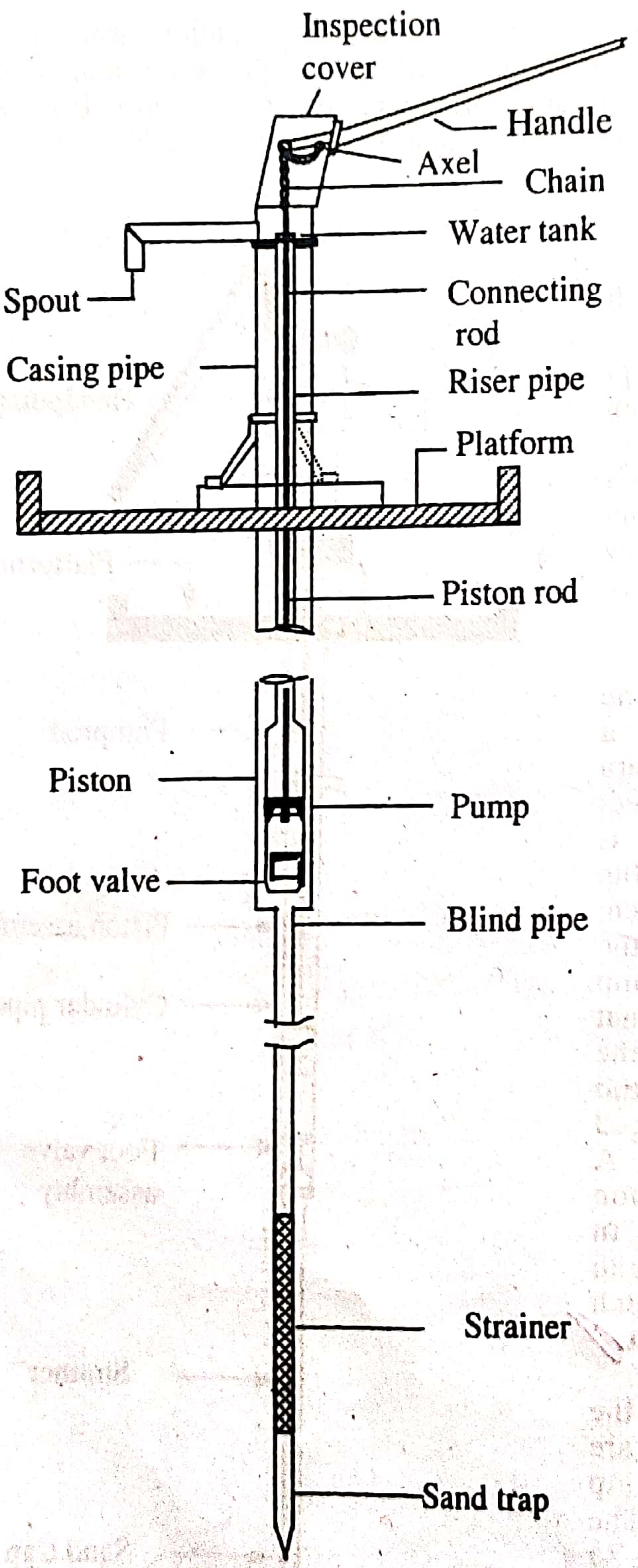

Figure 21.8 Mark II handpump tubewell

thepump is operated by a connecting rod instead of a PVC pump rod. The diameter of the rising main is reduced to reduce the load of water on the piston, and the length of the handle is increased to enhance the lever action. The main components of the tubewells are pump head assembly, blind pipe and filter and the cylinder assembly.

The pump head assembly consists of a handle, head, water tank, stand, riser pipe, connecting rod, spout, leg, etc. A typical diagram of a Mark II tubewell with different components is shown in Figure 21.8.

The Mark III is an improved version of the Mark II handpump tubewell A Mark III pump has an improved connecting rod made of fiberglass. The other parts are mostly the same as those of the Mark II.

Manually operated deep tubewell

A tubewell installed to withdraw water from a deep aquifer is called a deep tubewell. Usually a deep tubewell penetrates more than one aquifer, but in Bangladesh a tubewell deeper than 75m is called deep tubewell. The deep tubewell operates under the suction mode exactly in the same manner as a shallow tubewell, the only difference is that the depth of a deep tubewell is more than 75m. In most saline zones (coastal belt), the depth of a tubewell is about 300 m. The No.6 tubewell can be made into a manually operated deep tubewell by adding more blind pipes to reach the desired aquifer. In Bangladesh, deep tubewells are usually installed in saline areas to extract water from deep fresh water aquifers. Since the water level lies very close to the ground level in the coastal areas, a suction pump having a No.6 pump head operates satisfactorily throughout the year. The differences between shallow and deep tubewells have been illustrated in Figure 16.5. As deep bore holes are required for installation of deep tubewells, the construction method of deep tubewell is different from that of No.6 shallow tubewells. Sometimes mechanical devices are necessary for construction of these tubewells.

21.4 DESIGN, CONSTRUCTION ANDMAINTENANCE OF TUBEWELLS

Well design

The design of tubewells mainly involves the selection of length, diameter, and slot opening of the screen and design of the shroud materials, on the basis of the available aquifer characteristics. The thickness and particle size distribution of aquifer sand are essential for the design of the screen. For this a particle size analysis must be carried out. Aquifer materials collected at definite intervals during the drilling of the bore hole undergo sieve analysis. The results are presented in the form of cumulative percent finer against grain size as shown in Figure 21.9. 'The results may also be presented as cumulative percent retained versus grain size.

The size corresponding to 10% finer is called the effective size, which governs the permeability of the aquifer. The ratio of the size corresponding to 60% finer and the effective size is called the uniformity coefficient, which defines the uniformity of the grain size. Thus uniformity coefficient can be expressed as:

$$U = D_{60}/D_{10} \tag{21.1}$$

Where U = uniformity coefficient, D_{60} = grain size corresponding 60% finer and D_{10} = grain size corresponding 10% finer, i.e. effective size. The aquifer materials having twice the effective size and a similar uniformity coefficient have four times higher permeability.

The best aquifer for screening is determined by comparison of the grain size analysis curve of the materials along the depth of bore hole. The slot of the screen should be such that it will retain only 40 to 60% aquifer sand. The grain size corresponding to 60% or 50% finer as shown in Figure 21.9. will determine the slot size of the strainer. If the slot size is required to be increased, the tubewell has to be shrouded with coarse-grained materials.

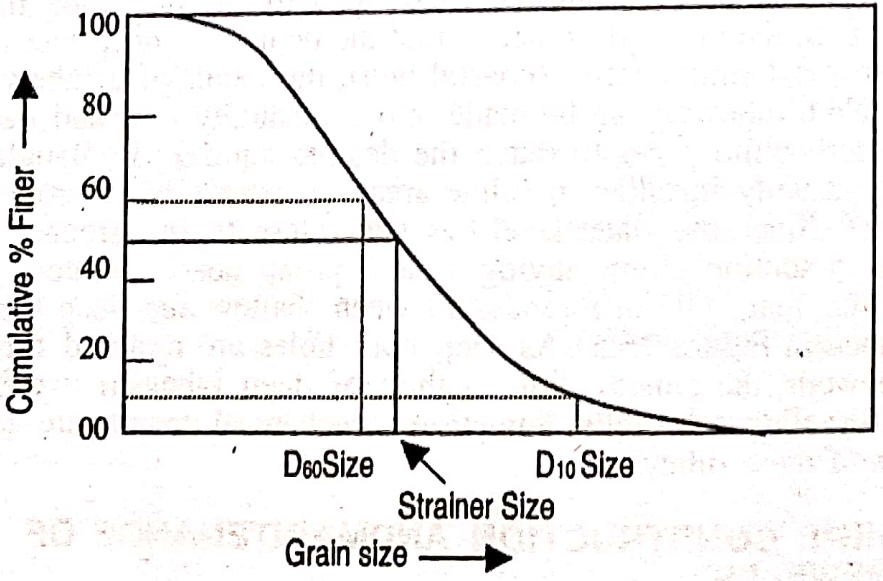

Figure 21.9 Grain size distribution curve

The length and diameter of the strainer will be determined on the basis of permissible entrance velocity, percent opening of the strainer and thickness of the aquifer. The length and diameter of the strainer required may be calculated from the expression:

$$Q = \pi D L (0.01p) v_e \tag{21.2}$$

Where Q = design discharge of the tubewell, D = diameter of the screen, L = length of the screen, p = percent opening of the screen, generally dependent on slot size and available from specification, v_e = permissible entrance velocity.

The entrance velocity while the water is entering into the screen should not exceed 0.03 m/s. An entrance velocity less than 0.03 m/s results in low frictional head loss in the screen, low encrustation and corrosion. The entrance velocity should be maintained in the range between 0.03 and 0.010 m/s.

The length of the strainer should also satisfy the requirement corresponding the thickness of the aquifer. Only about 70 to 80% of a homogeneous artesian aquifer can be screened provided that the pumping water level does not fall below the top of the aquifer. In the case of a water table aquifer the bottom one-third to half of the aquifer can be screened.

If the particle size of the aquifer material is very fine or the depth of the aquifer is insufficient to provide a suitable screen, the tubewell may be shrouded. The tubewell may also be shrouded to obtain higher discharge. The shrouding materials retain the aquifer sand and prevent it from entering into the large slotted strainer. Theoretically, the maximum pore size of spherical granular material is one-sixth of its size. The shrouding materials selected must be 4 to 6 times larger than the size of the aquifer sand corresponding to 70% retained or 30% finer, and must have a uniformity coefficient less that 2.5. The procedure for the design of the shrouding materials is as follows:

- Draw particle size distribution curves of all the visible different strata of the aquifer sand where strainer of the tubewell will be located. Select the particle size distribution curve of the finest sand for the design of the shrouding material.
- Multiply the 70% retained size of the sand by a factor 4 if the sand is fine and uniform or 6 if the sand is coarser or non-uniform. Locate the result of multiplication as 70% retained size of the shrouding material. This is the first point of the curve that represents the artificial shrouding material.
- Draw a smooth curve representing a shrouding material with a uniformity coefficient of 2.5 or less through this 70% retention point of the material. It is to be done by trial and error.
- Prepare specifications for the shrouding material by selecting four or five standard sieve sizes that cover the spread of the curve and then set down the permissible range for percent retained on each of the selected sieves. The permissible range may be 8% above and below the percent retained at any point on the curve.
- Finally, select the size of the slot of the screen that will retain 90% or more of the shrouding material.

A very thin layer of shrouding material less than 25 mm thick can retain the aquifer sand, but it is impractical to place a thin gravel pack in a well and expect the material to completely cover the surrounding of the screen. A minimum thickness of 75 mm is considered practical for installation in the field to ensure an envelope of shrouding material around the screen along the entire length.

In case of shallow and very shallow shrouded tubewells a shrouding sand having D_{10} size or 90% retention size of 0.008 inches, fineness modulus of 1.6 and within the capacity of a person. The tubewell must be developed by continuous pumping after desanding for several hours until sand free water is discharged by the tubewell.

Re-sinking: Re-sinking of tubewell is needed when restoration of choked up tubewell by desanding fails. Shallow tubewells installed with properly connected GI pipes can be easily withdrawn for re-sinking by direct vertical pull but weaker PVC pipes usually tear off under high pull. Boring by the side of the pipe is usually employed to the extent required to withdraw a tubewell without tearing. A metalic ring attached to the boring pipe slides around the existing pipe of the tubewell to make it free from surrounding soil. The technique is known as side digging. The process reduces the friction between pipes and soil during withdrawal of the pipes by vertical pull. Sometimes side digging is required along the total length of the pipes to make the weak pipes free but it may not be cost effective. The re-sinking procedure of a tubewell is similar to sinking of a new tubewell.

21.5 ALTERNATIVE WATER SUPPLY TECHNOLOGIES

Technological options

The type of handpump technology suitable for a particular area depends on the groundwater level, water quality and hydrogeological conditions. There are some areas like the coastal belt in the southern part of Bangladesh, where the conventional shallow and deep tubewells technologies are not successful due to the high salinity. Alternative water supply options are needed for those areas. The important alternative water supply technologies include:

- Shallow shrouded tubewell (SST)
- Very shallow shrouded tubewell (VSST)
- Pond sand filter (PSF)
- Household filters
- Solar desalination
- Rainwater harvesting.

Shallow shrouded tubewell (SST)

In the high salinity coastal areas it has been found that fresh water is available in shallow aquifers composed of fine sand at 15 to 20 m depth. This is due to accumulation of rainwater in the topmost aquifer. However, the particle size of soil and the depth of the aquifer are not suitable for installing a normal tubewell. To get water through these very fine-grained aquifers, an artificial sand packing is required around the screen of the tubewell. This artificial sand packing, called shrouding, increases the yield of the tubewell and prevents entry of fine sand into the screen. The 15 to 20 m deep tubewells, installed with this technology are called shallow shrouded tubewells (SST). The SSTs are fitted with No.6 handpumps operating under suction mode. A typical SST with components is shown in Figure 21.10.

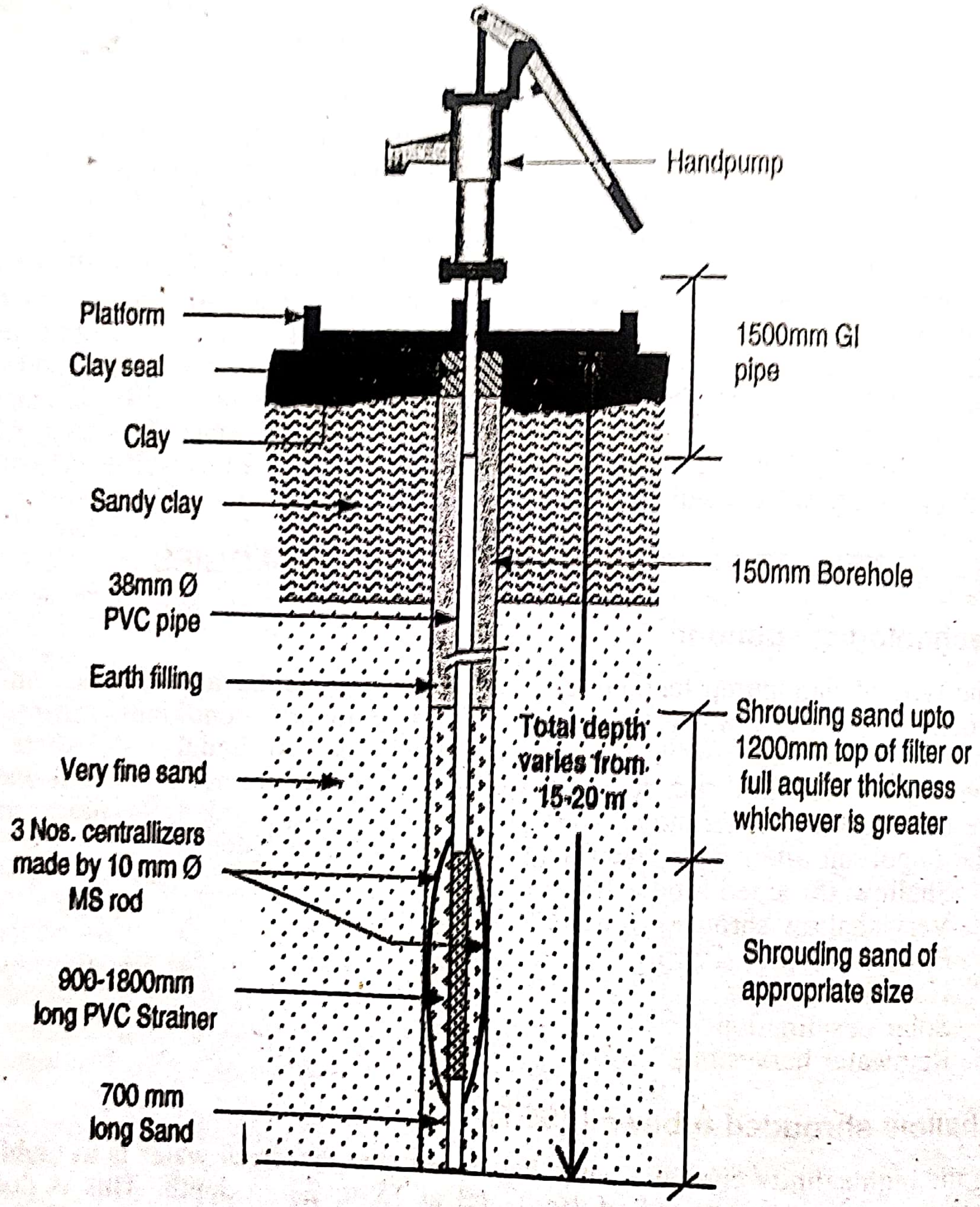

Figure 21.10 Shallow and very shallow shrouded tubewell

Very shallow shrouded tubewell (VSST)

This is a low-cost handpump tubewell about 8m in depth with a 2 m strainer shrouded with coarse sand. The VSST is designed to collect water from very shallow aquifers formed by displacement of saline water by a continuous flow of accumulated fresh water. The lenses of fresh water formed by this process are found beneath old ponds in coastal areas. In many places, ponds dry up but fresh water in shallow aquifers remains beneath the pond. Immobile preserved aquifers are also found at shallow depths at various locations in the coastal area. A VSST is a convenient method for withdrawal of fresh water in limited quantities. In many places, the water produced by VSSTs becomes saline due to rising of water caused by over-pumping. Installation of low capacity pumps may prevent over exploitation of shallow aquifers. The system is considered suitable for drinking water supply for small settlements where water demand is low. A VSST is not different from an SST except in the depth of well.

Pond sand filter (PSF)

An alternative and popular option of potable water supply in coastal problem areas is the pond sand filter (PSF). It is a package type slow sand filter unit developed to treat surface waters, usually low-saline pond water, for domestic water supply in the coastal areas. Slow sand filters are installed near or on the bank of a pond, which does not dry up in the dry season. The water from the pond is pumped by a manually operated hand tubewell to feed the filter bed, which is raised from the ground, and the treated water is collected through tap(s). It has been tested and found that the treated water from a PSF is normally bacteriologically safe or within tolerable limits. On average the operating period of a PSF between cleaning is usually two months, after which the sand in the bed needs to be cleaned and replaced. The drawing of a typical PSF is shown in Figure 21.11.

The problems encountered are low discharge and difficulties in washing the filter beds. Since these are small units, community involvement in operation and maintenance is absolutely essential to keep the system operational. The PSF is a low-cost technology with very high efficiency in turbidity and bacterial removal. It has received preference as an alternative water supply system for medium size settlements in arsenic affected areas and areas where low salinity groundwater is not available. Although PSF has a very high bacterial removal efficiency, it may not remove 100% of the pathogens from heavily contaminated surface water. In such cases, the treated water may require chlorination to meet drinking water standards.

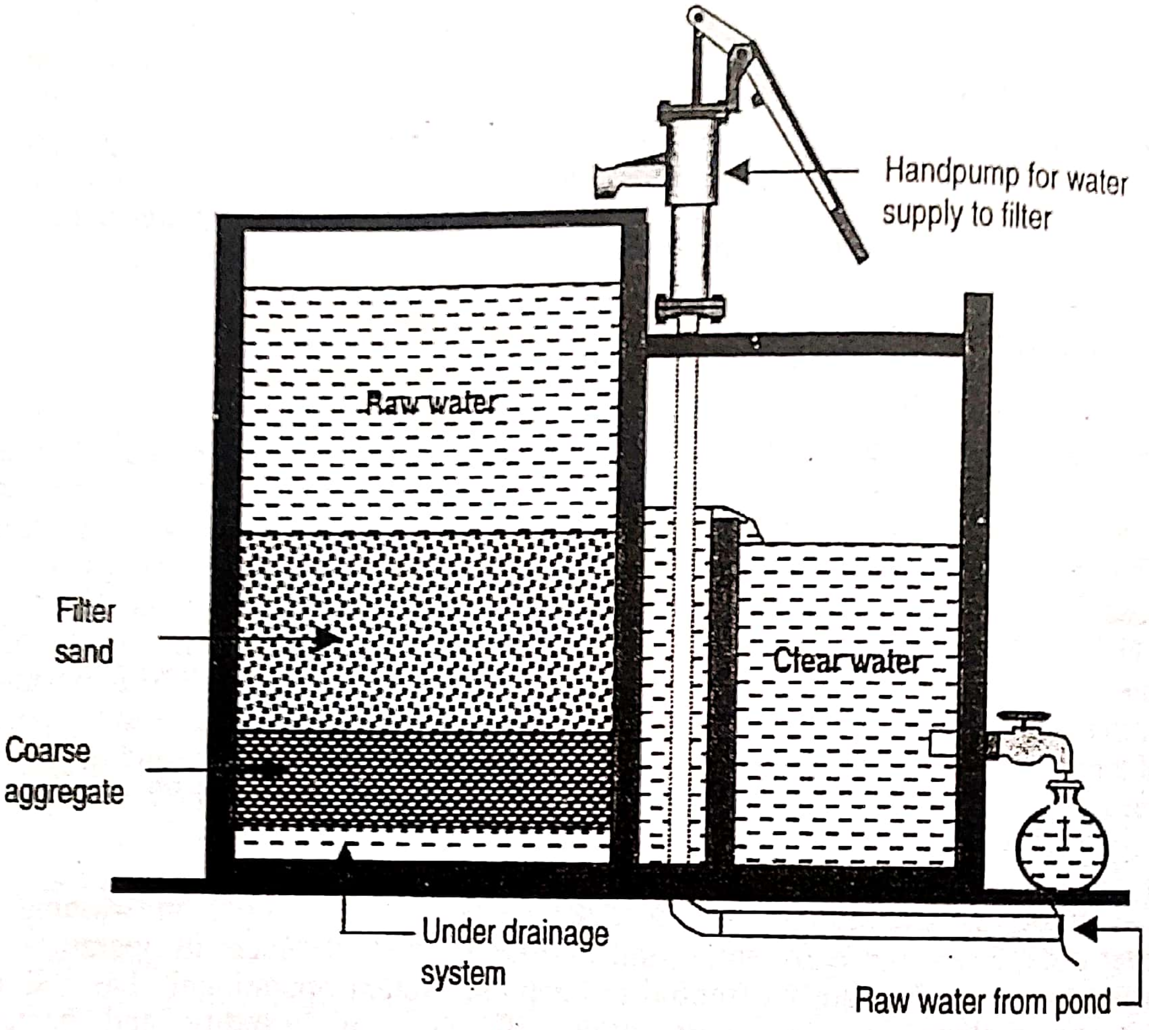

Figure 21.11 Pond sand filter

Household filters

Surface water containing impurities can be clarified by a pitcher filter unit or a small sand filter at the household level. It is an old method of water purification, once widely used in rural areas of Bangladesh. These processes of water treatment at household level have been phased out with the introduction of tubewells for village water supply. Pitcher filters are constructed by stacking a number pitchers (Kalshis), one above the other, containing different filter media as shown in Figure 21.12. Raw water is poured in the top Kalshi and filtered water is collected from the bottom one. In this process, water is mainly clarified by the mechanical straining and adsorption depending of the type of filter media used.

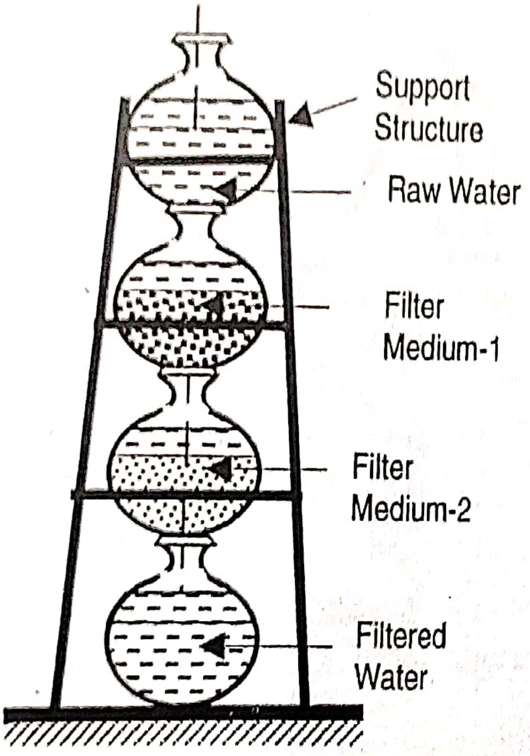

Figure 21.12 Pitcher (Kalshi) filter

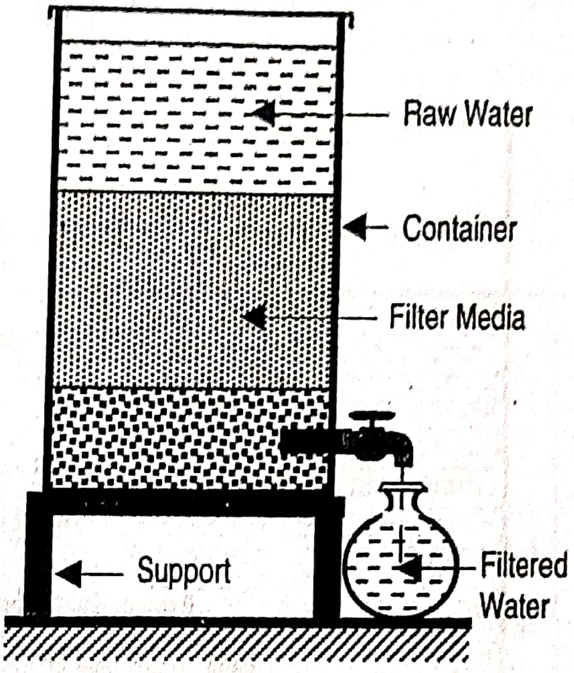

Figure 21.13 Small household filter

Small household filters can be constructed by stacking about 300-450 mm thick well graded sand on a 150-225 mm thick coarse aggregate in a cylindrical container as shown in Figure 21.13. The container is filled with water and the filtered water is collected from the bottom. It is essential to avoid drying up of the filter bed. Full effectiveness of the filtration process is obtained if the media remain in water all the time. The pitcher and other small household filters cannot completely remove micro-organisms if these are present in large numbers in raw water. Experimental units constructed in Bangladesh and in other countries show that the residual coliform bacteria present in the filtered water may vary from a few to several hundred. However, improvement of water quality by household filters is remarkable.

The important characteristics of household filters are:

- suitable for surface water treatment;
- remove turbidity, colour and micro-organisms;
- complete removal of pathogenic micro-organisms is not guaranteed;
- not suitable for high-turbid water;
- difficulty in cleaning and keeping the system operational.

Infiltration well/gallery

Installation of infiltration wells/galleries along banks of rivers and ponds provides clean water for domestic purposes. Rivers or ponds with sandy soils are suitable for construction of infiltration well/galleries. Sometimes, sand beds are placed between the source and infiltration well/gallery for the filtration of water. An infiltration well/gallery constructed by the side of a pond/river is shown in Figure 21.14.

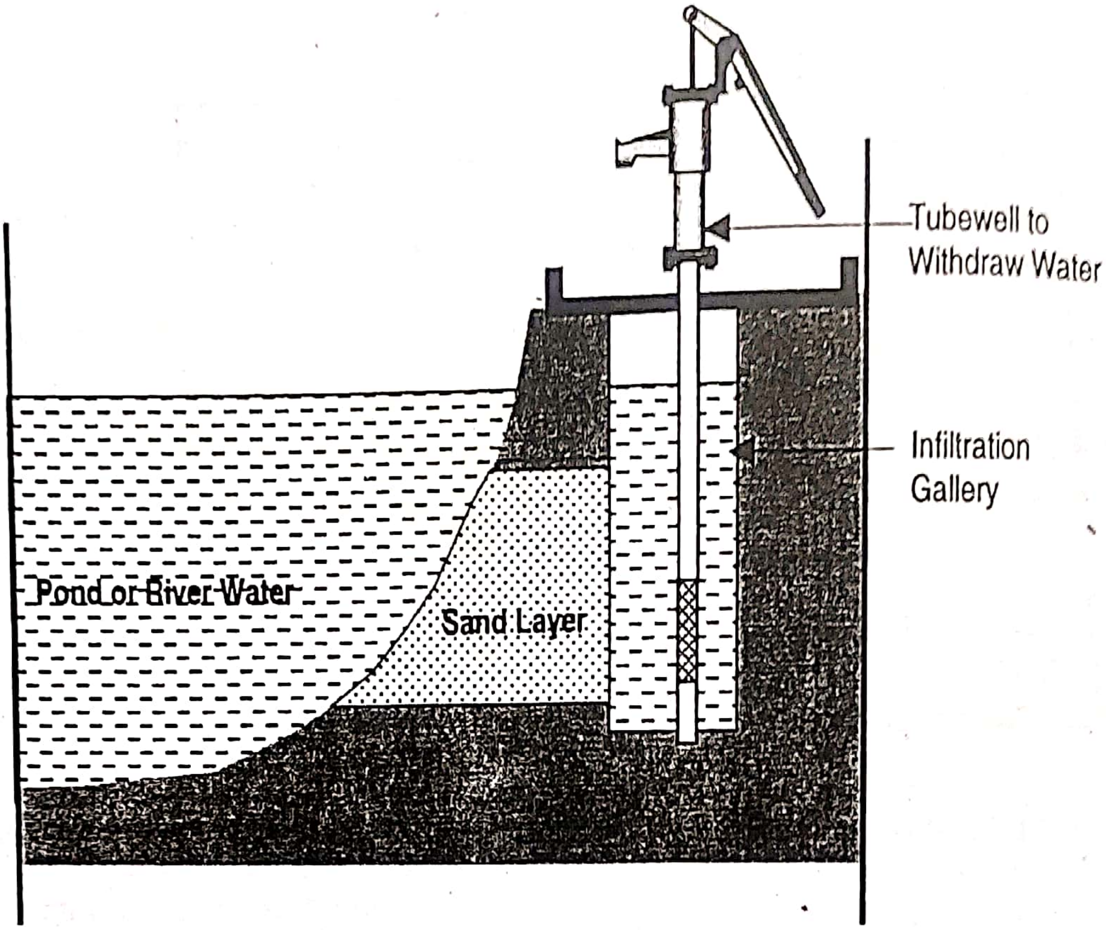

Figure 21.14 Infiltration well/gallery constructed along pond/river

The main problem encountered with infiltration galleries is the sanitary protection of water. Water without proper sanitary protection becomes soon contaminated. Installation of handpump tubewell for collection of water from a sealed infiltration well/gallery shown in Figure 21.14 can provide good sanitary protection. Sometimes, permeability at the entrance of surface water from the source is greatly reduced by entrapped suspended particles and deposited clay materials.

Rainwater harvesting

In the coastal belt and hilly regions of Bangladesh suitable water sources are scarce. The coastal belt suffers from high salinity in surface and groundwaters and the hilly areas suffer from absence of surface and groundwater sources for the development of a dependable water supply system. The average annual rainfall in the coastal and hilly regions is more than 3000 mm, against an average rainfall of about 2400 mm in Bangladesh. The collection and storage of rainwater is an alternate option of water supply in these areas. Rainwater harvesting is a potential water supply option in the acute arsenic affected areas of Bangladesh. Rainwater collection in Bangladesh has been practiced for a long time on a limited scale. There are two main constraints in development of a completely rainwater based water supply system:

- availability of suitable catchment area and the need for larger storage tank.

A large catchment for rainwater collection is needed if the total water supply is based on rainwater. Again a larger storage reservoir is required for unequal distribution of rainfall throughout the year. The advantages and disadvantages of rainwater collection systems over the other water supply schemes are presented in Table 21.1

Table 21.1: Advantages and disadvantages of rainwater collection system

Advantages	Disadvantages
• The quality of rainwater is comparatively good • The system is independent and therefore suitable for scattered settlements • Local materials and craftsmanship can be used in construction of rainwater system • No energy costs are incurred in running the system • Ease in maintenance by the owner/user • The system can be located very close to the consumption points	• The initial cost may prevent a family from installing a rainwater harvesting system • The water availability is limited by the rainfall intensity and available roof area • Mineral-free rainwater has a flat taste, which may not be liked by many • Mineral-free water may cause nutrition deficiencies in people who are on mineral deficient diets • The poorer segment of the population may not have a roof suitable for rainwater harvesting

Rainwater availability: Rainwater is available in adequate quantities in Bangladesh. The spatial distribution of normal rainfall in Bangladesh has been shown in Figure 16.11. The distribution of rainfall in figure 16.11 shows that relatively higher rainfalls occur in the eastern part of the country and the highest rainfalls occur in the north-eastern region and eastern part of the coastal area. The lowest rainfall, less than 1500 mm per year, occurs in the western part of Bangladesh. In the coastal and hilly areas, with a greater fresh water source problem, rainfall is higher, which is favourable for rainwater harvesting.

A ten-year rainfall pattern based on the mean rainfall intensity recorded in 28 stations for the period from 1987 to 1996 is shown in Figure 21.15 (BBS, 1997). It appears that the average yearly rainfall in the country during 1987-96 varied from 1950 to 2800 mm, i.e. 1.95 to 2.80 m^3 of rainwater was available per m^2 of catchment area each year for development of a rainwater based water supply system. However, there are some losses in the collection system. The available rainwater can be estimated by the equation:

$$Q = C\,I\,A \tag{21.1}$$

Where Q is the total quantity of rainwater available in m^3/ year, C is the coefficient of available runoff, I is the rainfall intensity in m/year and A is the catchment area in m^2.

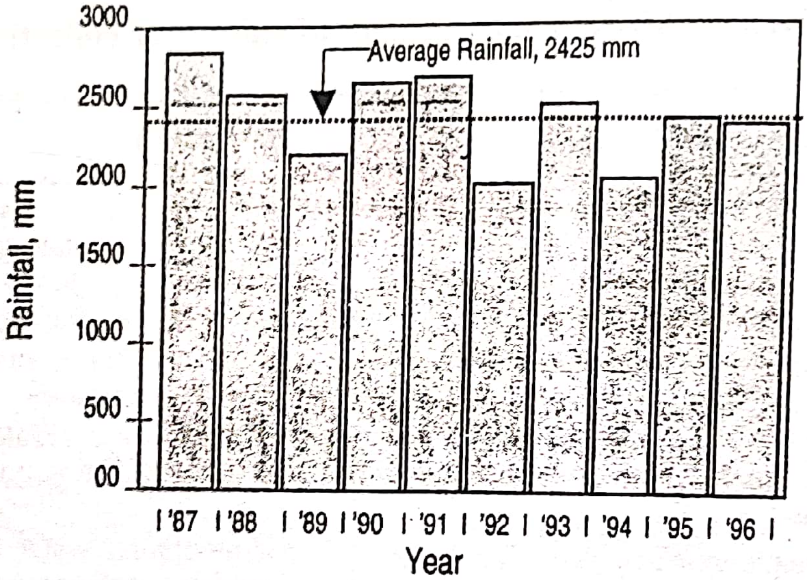

Figure 21.15 Variations of annual rainfall in Bangladesh

Rainwater catchment: The catchment area for rainwater collection is usually the roof, which is connected to a gutter system to lead rainwater to the storage tank. Rainwater can be collected from any type of roof, but concrete, tiles and metal roofs give comparatively cleaner water. The CI sheet roofs commonly used in Bangladesh perform well as a catchment area. A thatched roof can also be used as catchment area by covering it with polyethylene, but it requires good skills to guide water to the storage tank. In coastal areas of Bangladesh, a cloth fixed at four corners with a pitcher underneath has been found to be used during rainfall for rainwater collection. The minimum catchment area A, required for the collection of rainwater for N number of people supplied with q litres per capita per day (lpcd) of water can be derived from equation 21.1 as:

$$A = 0.365\, q\, N/(C\, I) \qquad (21.2)$$

About 25% of the rainwater may be assumed to be lost by evaporation and by washing the catchment area. The catchment area is usually washed using first rain, which produces inferior quality rainwater. For an average annual rainfall of 2.4 m/yr, as indicated in Figure 21.15 and a coefficient of runoff of 0.75, equation 21.2 can be written in the following form:

$$A = 0.203\, q\, N \qquad (21.3)$$

The poorer segment of the population is in a disadvantageous position with respect to utilization of rainwater as a source of water supply. This group of people has smaller thatched roofs or no roofs at all, to use as a catchment for rainwater collection. The use of land surface as a catchment area and an underground gravel/sand packed reservoir as a storage tank can be an alternative system of rainwater collection and storage. In this case, the water has to be channeled towards the reservoir and allowed to pass through a sand bed before entering into underground reservoirs. This process is analogous to recharge of underground aquifers by rainwater during the rainy season for utilization in the dry season.

Storage tank: The unequal distribution of rainfall over the year requires storage of rainwater during the rainy season for use in the dry season. The minimum volume of the storage rainwater tank V, required for rainwater can be computed by the equation:

$$V = 0.365 f q N \qquad (21.4)$$

Where f is the fraction of total available rainwater required to be stored for consumption at a constant rate throughout the year. The total annual rainfall in 1996 as shown in Figure 21.15 is approximately equal to the average annual rainfall of the last ten years. The monthly distribution of average rainfall in 1996 shown in Figure 21.16 is assumed to represent the average condition. The rainwater availability mass curve in Figure 21.16. has been constructed assuming that the cumulative consumption/demand at a constant rate is equal to total available rainwater

The mass curve has been prepared assuming that 75% of the rainwater would be available. It may be observed that there is a shortfall of 0.48 m^3 in the dry periods and an excess of 0.24 m^3 during rainy season. For full utilization of rainwater potential, a storage tank with capacity 0.72 m^3 (40% of the available rainwater) is required for uninterrupted water supply at a constant rate throughout the year. However, if only drinking and cooking water is harvested, the sizes of the storage tank and catchment area would be smaller and within an affordable range for a family. Substituting $f = 0.4$ in equation (21.4) for representative rainfall distribution of 1996, the minimum volume of the storage tank required for rainwater becomes:

$$V = 0.146\, q N \qquad (21.5)$$

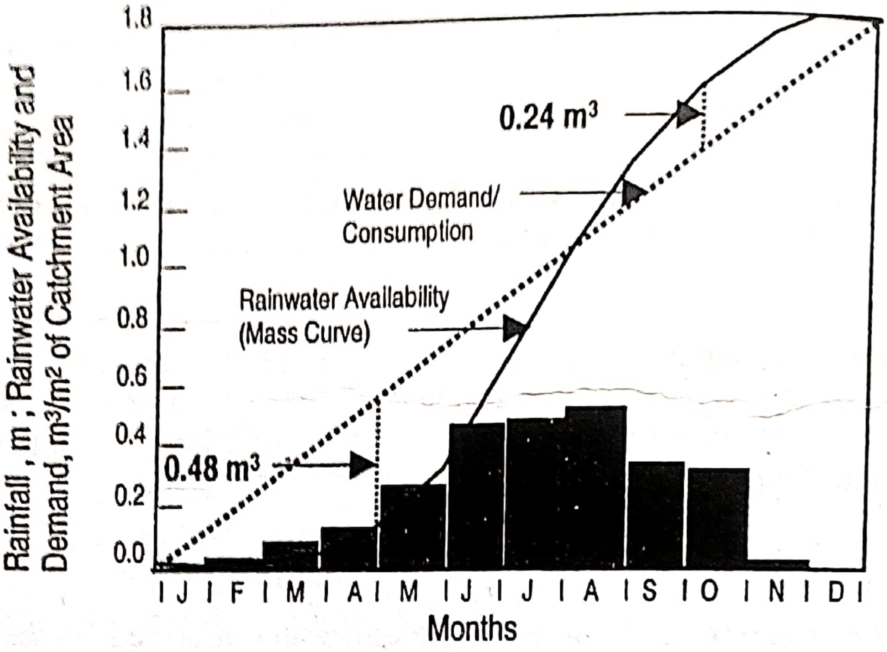

Figure 21.16 Rainfall intensity, cumulative rainwater availability and demand

Quality: The quality of rainwater is good, but it does not mean that rainwater is completely free from contamination. Wind blown dirt, bird droppings and other debris contribute some pollution. The rainwater is essentially lacking in mineral salts including fluorides and calcium salts, whose presence in water supply is considered essential in appropriate proportions. The mineral salts in natural ground and surface waters sometimes impart a pleasing taste to water. Water quality tests have shown some bacteriological contamination of water from roofs. Conditions of the roof and storage tank are critical in maintaining the quality of rainwater. If the storage tank is completely covered and the organic debris is prevented from entering into the storage tank by means of a suitable strainer or filter, any bacteria or parasites carried with the flowing rainwater will tend to die off. Thus rainwater drawn from a clean tank several days after the first rainfall will be of better bacteriological quality than fresh rainwater.

Rainwater collected from the roof after a long dry period may carry noticeable amounts of debris arising from accumulated dust and leaves on the roof and gutter. It is recommended that water running off the roof during first 10-20 minutes of rainfall should be discarded. Many devices have been suggested to store or divert the first foul flush away from the storage tank. These practices are quite effective in preventing visible debris from entering into the storage tank but less effective in preventing bacteriological pollution. In view of difficulties which may make the rejection of first flow impracticable, cleaning of the roof and gutter at the beginning of the rainy season and their regular maintenance are very important to ensure better quality rainwater. The storage tank requires cleaning whenever the tank is empty or at least once per year. If possible, the storage tank should be disinfected during cleaning.

Solar desalination

Solar desalination units based on conventional evaporation and condensation facilitates can be installed for drinking water supply. Experimental units constructed in the coastal areas of Bangladesh have produced 0.6 - 2.4 $l/m^2/d$ of water with an average yield of 1.41 $l/m^2/d$. The water produced by solar desalination is completely free of salinity and can be mixed with tubewell water to increase the volume of water for drinking water supply. The technology cannot produce an adequate quantity of water at a reasonable cost. The system requires further development for use in water supply in rural areas.

Comparison of main technological options

A comparison of low-cost technological options for water supply is shown in Table 21.2.

Table 21.2: Comparison among some conventional water supply technological options

Different technological options	Cost (base year, 1998)	Advantages	Disadvantages	Status in Bangladesh
Open dug well	Low	☐ Low-cost ☐ Free from iron and arsenic	☐ Sanitary protection is difficult ☐ Water collection is difficult	☐ Construction has been restricted by large scale installation of tubewells
No. 6 handpump	2,000-4,000 Tk.	☐ Suitable for favourable shallow water table area (up to 7.5 m) ☐ Presently private sector is providing services and spare parts for installation, maintenance and repairing ☐ The spares are available in open market ☐ Easy to operate	☐ Many tubewells produce water with high arsenic content ☐ Water generally hard, use for bathing and cooking is restricted by different complaints	☐ Well-adopted throughout the country ☐ No.6 handpump is promoted by UNICEF, DPHE and also private sector
Tara handpump	13,000-15,000 Tk.	☐ Suitable for LWT zone up to a depth of 15m of static water level	☐ More force is required ☐ Buoyancy force is not always available due to leakage in pump rod ☐ Provides moderate output up to 7 m lift and very low output at 12 m lift ☐ Repairing/ replacement of parts is inconvenient ☐ Installed mainly through the public sector ☐ Tara has not yet been proved to be user friendly	☐ Tried on experimental basis ☐ Tara handpump is promoted by UNICEF,DPHE, UNDP- WB

Deep tubewell	50,000-70,000 Tk.	☐ Deep tubewells are usually installed in saline areas to extract water from deep fresh water aquifers	☐ Mechanical devices are needed for construction of these tubewells ☐ The installation cost of deep tubewells is too high	☐ Deep tubewells are promoted by UNICEF and DPHE
Pond sand filter (PSF)	20,000-30,000 Tk.	☐ PSF can utilize surface water and is especially suitable or coastal belt and arsenic affected areas		☐ Tried on experimental basis ☐ PSF is promoted by UNICEF and DPHE
Shallow shrouded tubewell (SST)	4,000-6,000 Tk.	☐ Extract sweet water shallow aquifers in saline belt	☐ Identification of the existence of fresh water pockets is difficult	☐ Tried on experimental basis ☐ SST is promoted by UNICEF and DPHE
Very shallow shrouded tubewell (VSST)	3,000-5,000 Tk.	☐ Extract sweet water from very shallow aquifers in saline belt	☐ Identification of the existence of fresh water pockets is difficult ☐ Drilling failure is common ☐ Lifespan is short	☐ Tried on experimental basis ☐ VSST is promoted by UNICEF and DPHE
Rainwater harvesting (household)	3,000– 4,500 Tk	☐ Suitable for arsenic affected areas ☐ Free from impurities	☐ Distribution of rainfall throughout the year is uneven	☐ Experimental unit have been constructed.

21.6 WORKED EXAMPLE

Example - 1

Design a strainer for a 38 mm diameter tubewell to be operated by a No.6 handpump at the rate of 40 lpm. Slot No.10 strainer having a 40% open area is to be used. The entrance velocity should be around 0.01 m/sec.

Solution: The open area per metre of 38 mm strainer = $\pi\, d \times 1 \times 0.04 = 3.14 \times 0.038 \times 1 \times 0.4 = 0.0477\ \text{m}^2/\text{m}$

$Q = 40$ lpm $= (40/60) \times 10^{-3}\ \text{m}^3/\text{sec.} = 0.67 \times 10^{-3}\ \text{m}^3/\text{sec.}$

Entrance Velocity, $v_e = 0.01$ m/sec.

Entrance area required $= Q/v_e = 0.67 \times 10^{-3}/0.01 = 0.067\ \text{m}^2$

Length of the strainer required $L = 0.067/0.0477 = 1.4$ m

Strainer length of 1.5 m may be provided.

The length of the strainer can also be computed using equation 21.2 directly.

Example - 2

Calculate the rainwater available for a family having a roof area of 20 m² in the central region of Bangladesh, where rainfall intensity is 2.0 m per year. Assume a runoff coefficient of 0.75.

Solution : Quantity of rainwater available, $Q = CIA$

$C = 0.75$; $I = 2.0$ m/yr; $A = 20$ m^2

$Q = 0.75 \times 2.0 \times 20 = 30$ m^3/yr

Example - 3

The average rainfall intensity in Bangladesh is 2.4 m/yr. and the runoff coefficient is 0.70. Calculate the minimum catchment area required for a family of 7 persons to be supplied with 15 lpcd of water.

Solution: The catchment are required is, $A = 0.365\, q\, N/(C\, I)$

$q = 15$ lpcd; $N = 7$; $C = 0.7$; $I = 2.4$ m/yr

$A = 0.365 \times 15 \times 7/(0.70 \times 2.4) = 22.8$ m^2

Example - 4

Calculate the minimum capacity of the storage tank required for a family of 8 persons to be supplied with 10 lpcd of rainwater. The yearly rainfall intensity is 2.5 m and the rainfall distribution is such that at least 35% of the rainwater must be stored for uninterrupted water supply throughout the year. Also calculate the minimum catchment area required when the coefficient of runoff is 0.7.

Solution: Storage volume required $V = 0.365\, f\, q\, N$

$f = 0.4$; $q = 10$ lpcd; $N = 8$; $C = 0.7$; $I = 2.5$ m

$V = 0.365 \times 0.4 \times 10 \times 8 = 11.68$ m^3

$\therefore A = 0.365\, q\, N/(C\, I)$

$A = 0.365 \times 10 \times 8/(0.7 \times 2.5) = 29.2/1.75 = 16.69$ m^2

Example - 5

Calculate the per capita water available and the capacity of the storage tank required for a family of 6 persons having a roof area of 20 m^2 with a runoff coefficient of 0.8. The family lives in a part of Bangladesh having a yearly rainfall of 2.5 m. The distribution demands 40% storage requirement for full utilization of rainwater.

Solution: Available rainwater, $Q = CIA$

$C = 0.80$; $I = 2.5$ m/yr; $A = 20$ m^2; $f = 0.4$

Available rainwater $= 20 \times 2.5 \times 0.8 = 40$ m^3

Storage volume required $= 40 \times 0.4 = 16$ m^3

Available rainwater per capita per day = 40 x 1000/(6 x 365)
= 18.26 lpcd.

Questions

1. What are the present practices of water supply in the rural areas of Bangladesh? Name the suitable alternative low-cost technological options for water supply in Bangladesh.

2. Describe the construction procedure of dug wells. How can you protect dug well water from contamination?

3. Why is the No.6 handpump tubewell the most popular in Bangladesh? Draw the sectional elevation of a No.6 handpump and label the different components of the pump.

4. Why is the Tara handpump tubewell developed and being promoted in Bangladesh? Compare the Tara and Mark-II handpump tubewells with necessary sketches.

5. What are the reasons for local development of Bangla and Moon handpumps? Draw a neat sketch of a Bangla handpump tubewell.

6. Design a strainer for a 30 mm diameter tubewell to be operated by a No.6 handpump at the rate of 25 lpm. A slot No. 12 strainer having 50% open area is to be used. The entrance velocity should not exceed 0.015 m/sec.

7. Describe a household filter for the treatment of surface water. Mention the important characteristics of a household filter.

8. Describe the working principles of a pond sand filter with a neat sketch. What are problems encountered in the operation and maintenance of pond sand filters?

9. What is the potential for rainwater harvesting in Bangladesh? What are the advantages and disadvantages of rainwater harvesting in Bangladesh?

10. The average rainfall intensity and distribution in Bangladesh in 1999 shows that the total rainwater available in that year is 2200 mm excluding the losses, and a storage volume of 30% of the available rainfall is required for a year-round supply. What are the minimum storage and catchment area required for drinking and cooking at the rate of 10 lpcd for a family of 8persons?

11. Compare the costs, advantages and disadvantages of a No.6 handpump, Tara handpump, and manually operated deep tubewell.

12. Draw a clear diagram of a very shallow shrouded tubewell. Discuss the usefulness of SST and VSST under conditions in the coastal areas of Bangladesh.